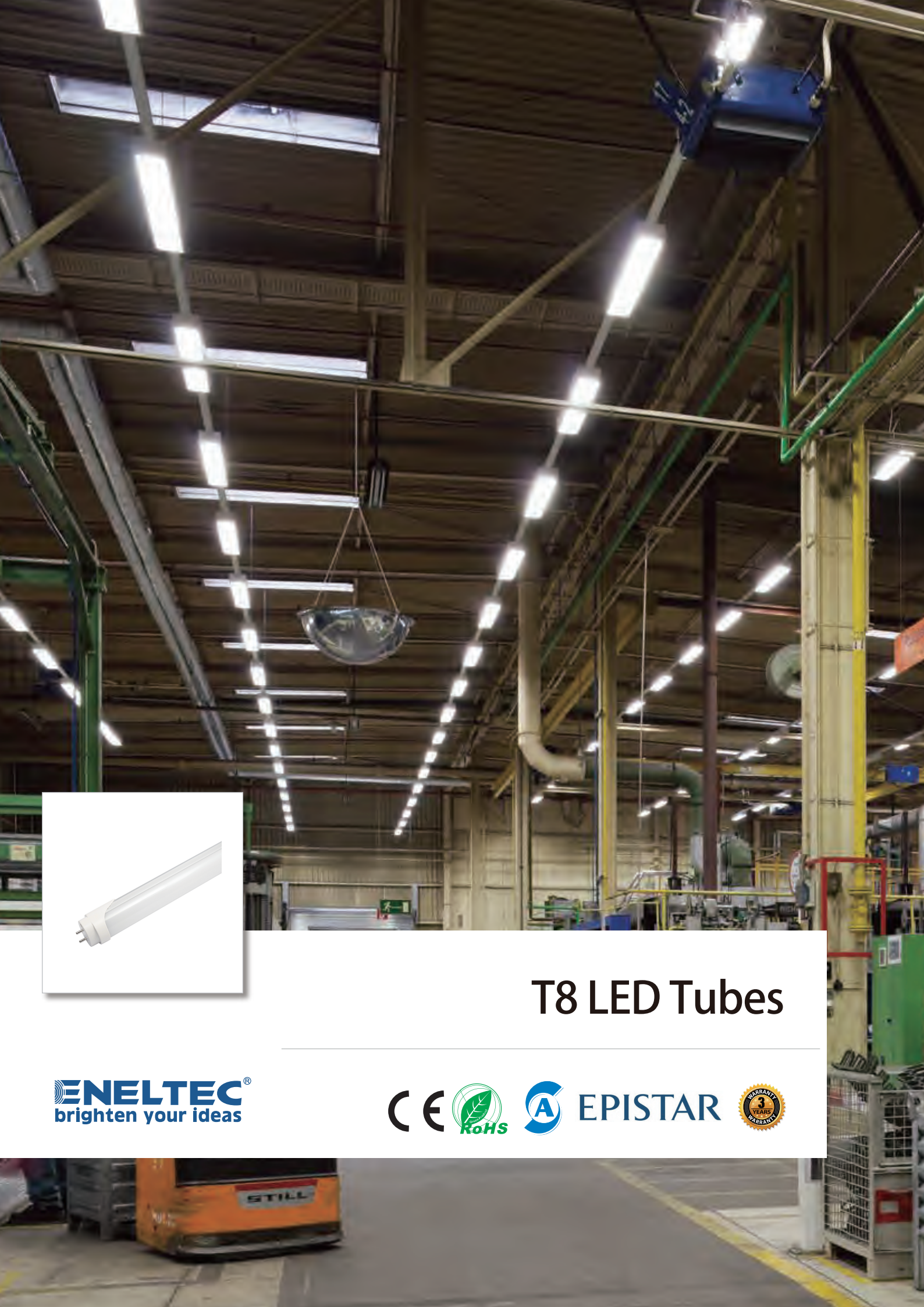

T8 LED Tubes

ENELTEC®
brighten your ideas

CE RoHS EPISTAR WARRANTY 3 YEARS

Why ENELTEC LED Tubes?

Significant cost savings

The ENELTEC LED tubes use 50–90 percent less energy than other lamps, depending on the age and type of the lamp in question. The lifespan of an ENELTEC LED tube is many times that of a normal fluorescent lamp, thus reducing the upkeep costs of lighting significantly. Even the lamp body has a few extra years added to its life due to the fact that the inductor is not subjected to as much stress and the tube holders are subjected to a lower amount of heat. Moreover, there is no need to change the starters once they have been installed.

Better light

The ENELTEC LED tubes produce good-quality light with high colour rendering. The blue wavelength present in the LED light is essential for visibility and there is also an unbroken, full spectrum which helps us to distinguish colours, for the whole area of visible light. This pure, natural light is suitable for all environments where people have to be able to see well. The light is also available for your use without delay and without the flickering normally associated with the switching-on stage.

The environment thanks you

By choosing an ENELTEC LED tube, you will also have a positive impact on the environment. LED tubes do not contain mercury, lead or any other heavy metals. This is why LED tubes are not categorised as hazardous waste. The recyclability ratio of LED tubes is extremely high: over 95%. ENELTEC LED tubes packaging uses as much recycled or recyclable cardboard and paper pulp as possible. Also, because of the energy efficiency of LED tubes, the need for electricity produced from fossil fuels decreases.

Safer lighting

By replacing your fluorescent lights with ENELTEC LED tubes, you will eliminate many of the risks related to lighting, such as UV light that is harmful to people and many materials. In addition, the ends of fluorescent lamps that have come to the end of their lifespan and that remain incandescent are one of the most common causes of fire. LED lamps contain no dangerous substances, such as mercury, and the surfaces of the tubes are shatter-proof. This makes the ENELTEC LED tubes highly suitable for use in the food industry, too.

Install by simply replacing the tube in most T8 *fluorescent tube luminaires*

Why ENELTEC LED Tubes are superior to others?

Automated manufacturing guarantees quality

ENELTEC LED tubes are manufactured a completely new automated production line. The automatic processing ensures a uniform quality and reliability that has not been met before in LED light sources. At the end of the manufacturing process each ENELTEC LED tube goes through a multiphase automated test process where the amount of light, the colour rendering index, the spectrum, light temperature, power, power ratio and harmonic distortion are measured.

Long lifespan

Due to its technical supremacy ENELTEC is able to offer an exceptionally long lifespan for its products. This enables realization of extensive and long-lasting lighting projects in parts by applying the same product.

Easy to install

It's possible to directly replace old T8 fuorescent tubes with ENELTEC LED tubes in the majority of existing luminaires.

Visibly better, non-dazzling light

The outstanding luminous efficacy (lm/W) is reached in collaboration with Sanan and Epistar. The unique semi-opal plastic dome maximizes light production and minimizes unwanted dazzle that bright LEDs might cause.

Passive cooling taken to the max

The passive cooling of LED components ensures an extremely long lifespan. The relatively large cooling surface underneath the medium power LED components conveys the heat efficiently from the LED components to the full-aluminium circuit board. The heat is further conveyed from the circuit board to the aluminium frame which thus functions as a large cooling element.

Brilliant electrical properties

The high power factor of the internal high-quality power source guarantees minimal electrical disturbances and excellent electrical properties for the LED components. The power source is assembled from the best components, ensuring a long lifespan. The power source is also designed to function in challenging circumstances over a very wide range of temperatures.

Directing the light

Rotating End Cap LED tube help to direct the light where it is needed.

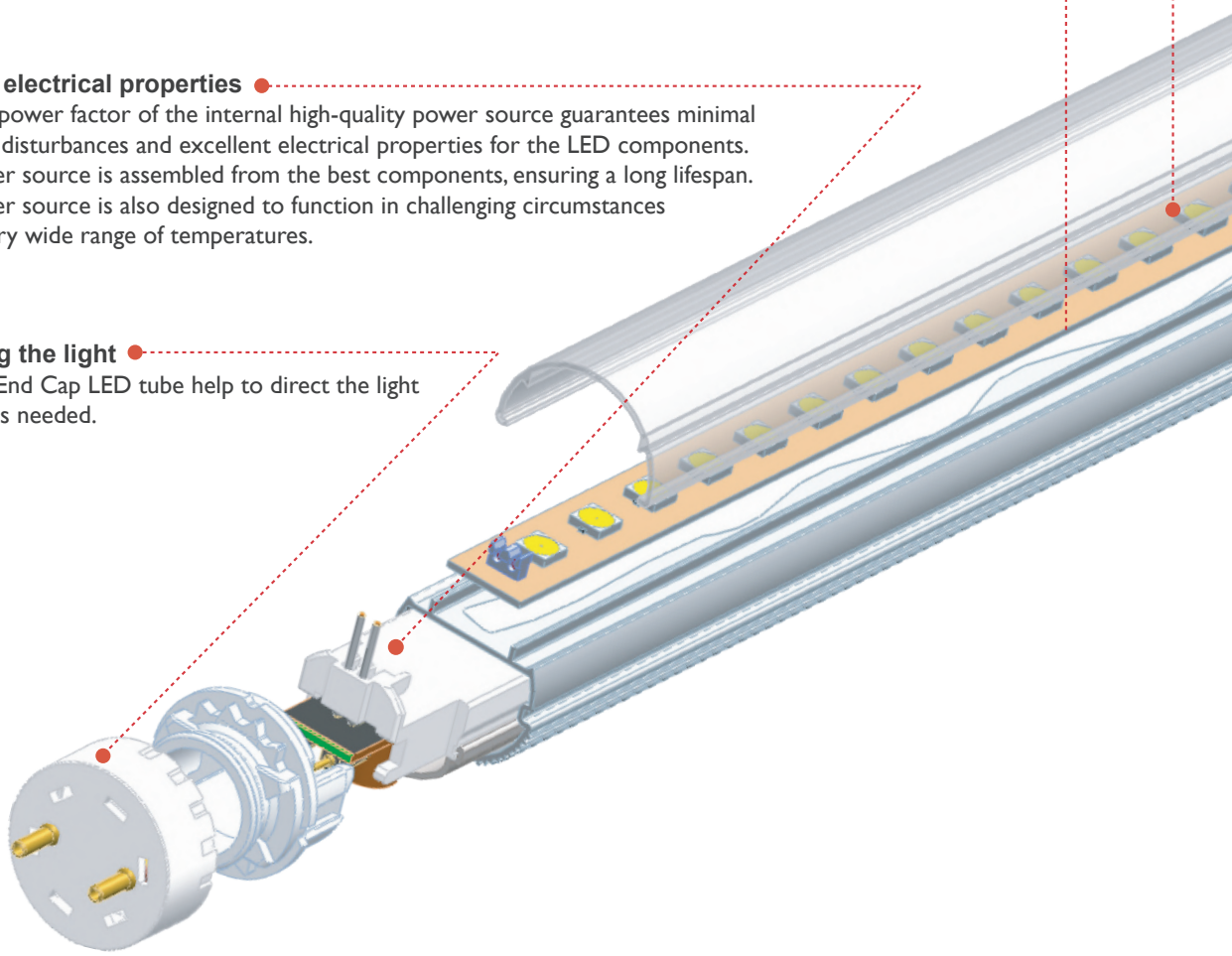

Features

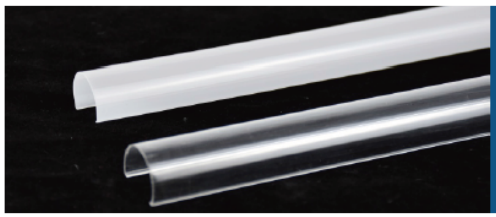

PC Cover

Milky cover and clear cover can be selected. The material is very thick, with high transmittance,and soft luminescence.Not easy to bend and yellow.

Different Material

Available in glass, aluminum and plastic. It has different characteristics such as oxidation resistance, high gloss and good heat dissipation.

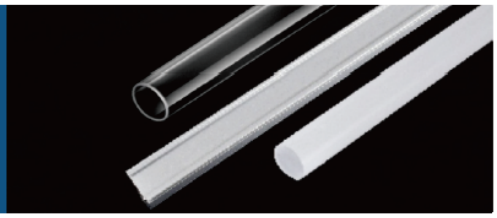

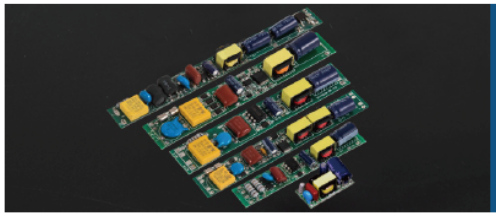

Constant Current Power Supply

High-quality power driver, using Aishi capacitor, brand IC and components, stable output current, long lifespan.

Various Lamp Caps

G13/G5/FA8/R17D lamp holders are available. PC fuel resistance, solid copper needle, good conductivity.

Dimensions

G13

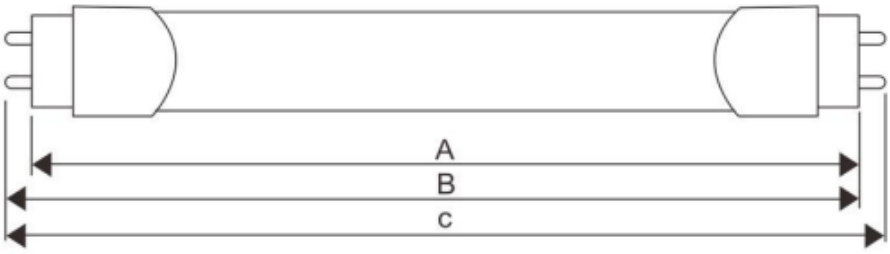

Length	A	B		C
	Min.mm	Min.mm	Max.mm	Min.mm
600	588	594.5	596.9	604.0
900	893	899.3	901.7	908.8
1200	1198	1204.1	1206.5	1213.6
1500	1498	1504.7	1507.1	1514.2
1800	1762	1768.5	1770.9	1778.0
2400	2372	2379.0	2381.4	2388.5

Applications

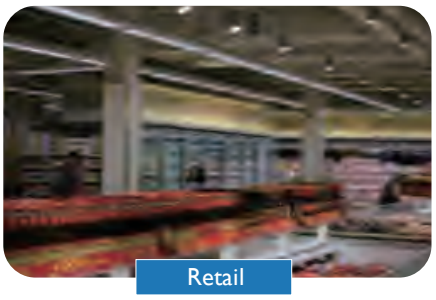
Retail


Industry

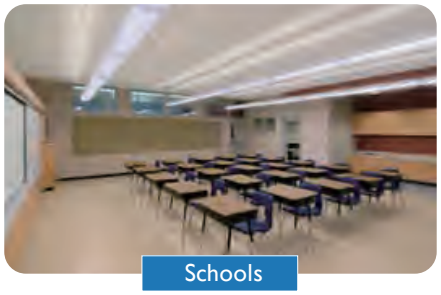
Schools


Hospitals

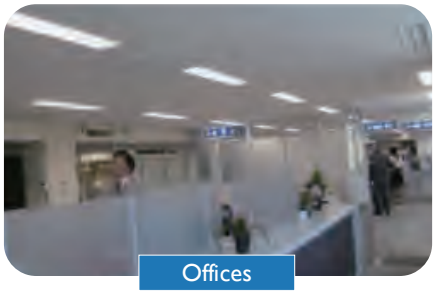
Offices

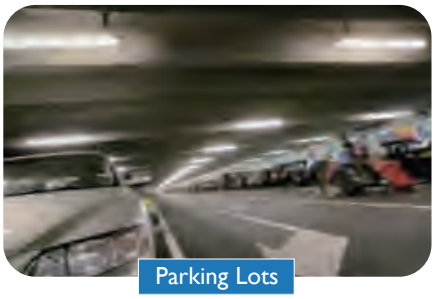
Parking Lots


Warehouses

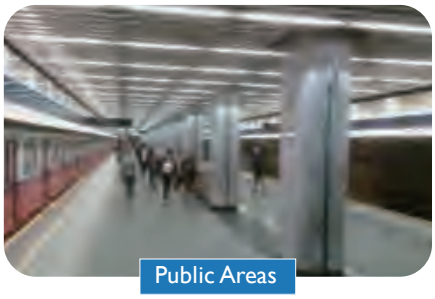
Public Areas

Lux Level

Lux level	Area or activity
100	Circulation areas e.g. corridors, stores and warehouses, changing rooms and rest areas
150	Active circulation e.g. stairs, escalators, loading bays
200	Facility lighting e.g. washrooms, foyers, lounges, archives, dining rooms, assembly halls and plant rooms
300	General background lighting e.g. IT office, packing, assembly (basic), filing, retail background, classrooms, sports halls, gymnasium and swimming pools
500	General lighting e.g. offices, CAD, laboratories, meeting rooms, general manufacturing, kitchens and lecture halls
750	Detailed lighting e.g. manufacturing & assembly (detail), paint spraying and inspection
1000	Precision lighting e.g. precision manufacturing, quality control, examination rooms
1500	Fine precision lighting e.g. Jewellery, watch making, electronics & fine working

Installation

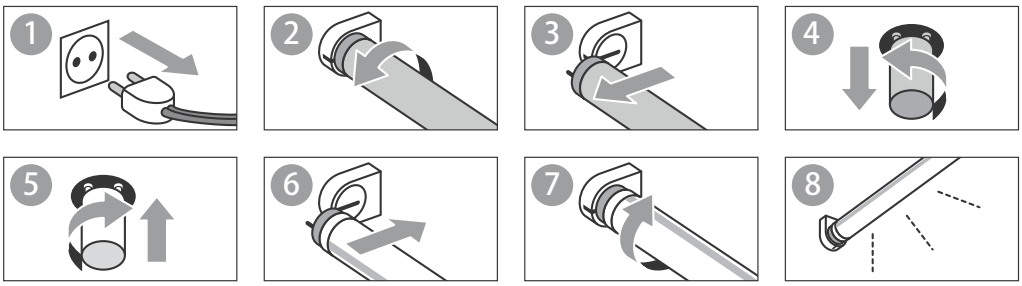

One side Input (Europe Standard)

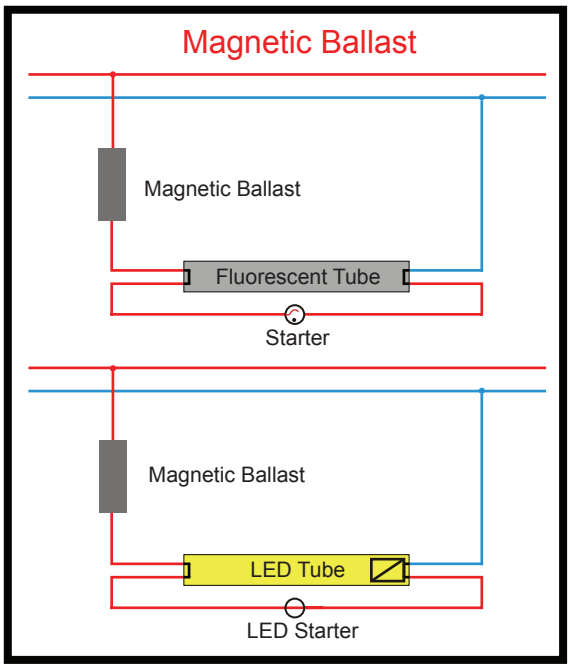

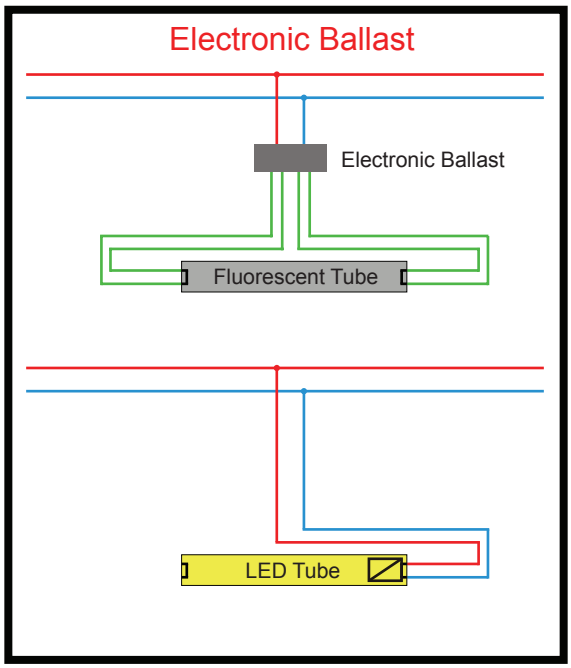

Two sides Input (Others)

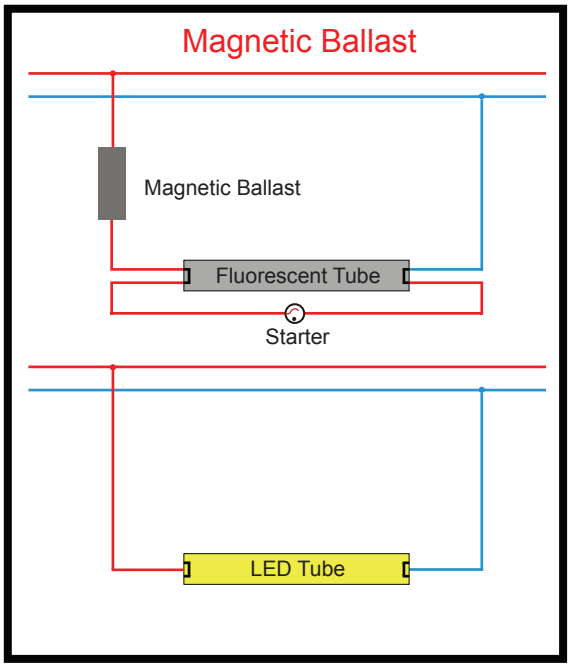

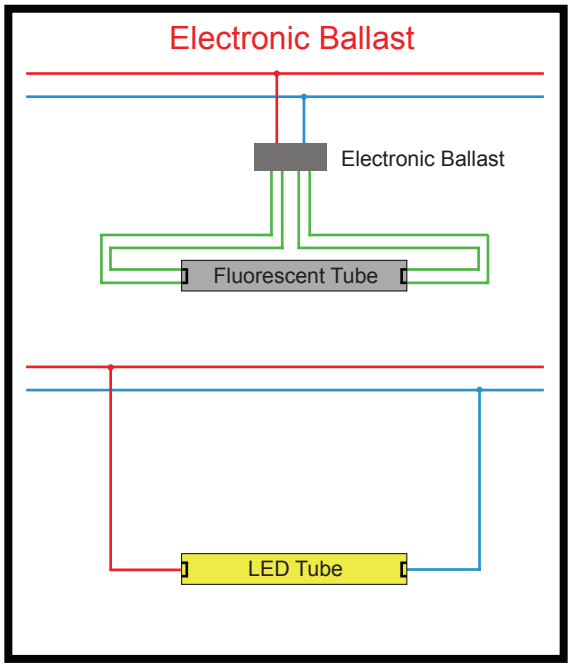

Integrated LED Tube Light: Aluminum+PC

T8 LED TUBE LIGHT-Aluminum & PC

Size	Power	CRI	Voltage	Power Factor	CCT
2FT	9W	>Ra80	AC85-265V	0.95	2700-6500K
3FT	14W				
4FT	18W	>Ra80	AC85-265V	0.95	2700-6500K
5FT	25W				