II 2G Ex eb mb IIC T4 Gb
II 2D Ex tb IIIC T(95°C) Db

"With Atex certified, our explosion proof light can be widely used for applications of flammable and explosive chemical materials. Bridgelux led and specially designed driver are used to guarantee safety and long lifetime."

ATEX
Certified

II 2G Ex eb mb IIC T4 Gb
II 2D Ex tb IIIC T(95°C) Db

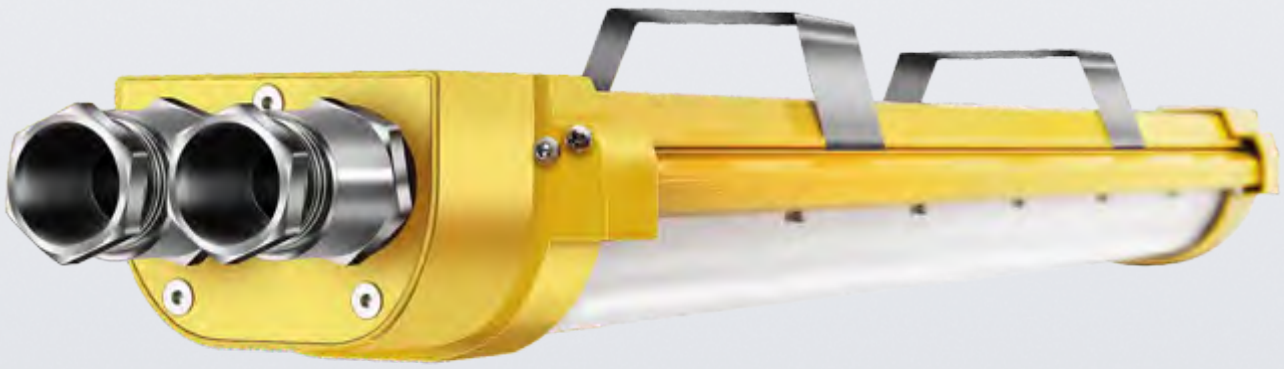

With ATEX certified, our explosion proof light fixture can be widely used for place of flammable and explosive chemical materials. Bridgelux brand led and specially designed high quality driver are used to guarantee safety and long lifespan. With 120lm/w high efficiency, our 40w can replace 120w traditional fixture. We give 3 years warranty

120LM/W

Bridgelux led is used to reaches 120lm/w

Linkable in Series

Each fixture has end cap with one gland and two glands for options. It can be open very easily. With 3x2.5mm2 wire through, it is linkable in series

Wago
connectors
Easy Rewiring
Cost Saving

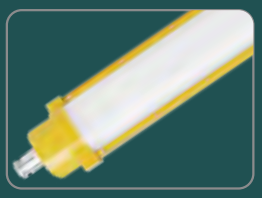

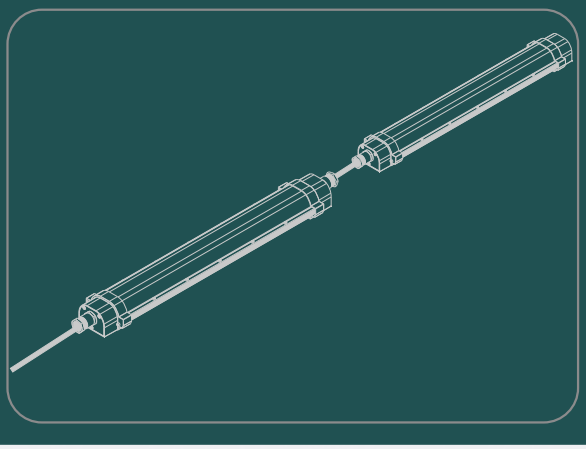

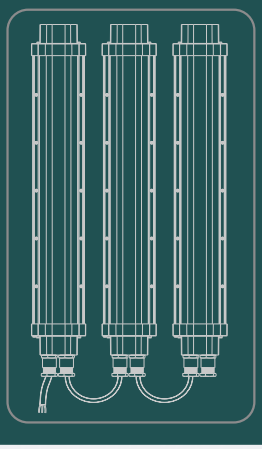

More Than Good

Bridgelux LED

Explosion Proof Driver

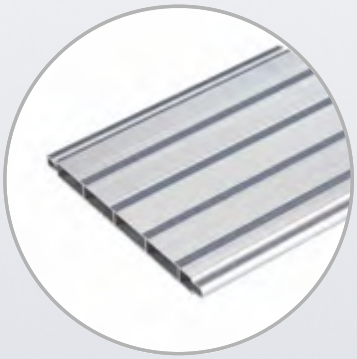

Aluminum heatsink

Application

Zone 1 Zone 2
Zone 21 Zone 22

Applied to oil fields, oil refineries, offshore oil platform, power plants, gas stations, oil tanks, wharf, tunnel, pumping station, substation, the military base,etc. Zone I and Zone II Hazardous Locations, Zone 20, Zone 21, Zone 22 and II A, IIB, IIC explosive gas atmosphere.

RoHS compliant

Patent

Features

Housing: Pure Aluminum A6063
Thermal Conductivity: 226 W/m·K
Led: Bridgelux
CRI: Ra>80
SDCM: <6
Power Factor: >0.95
THD: <15
Driver: Explosion Proof Driver
Driver Efficiency: >92%
Protection: OTP, OCP, OVP, SCP
Surge Protection: 4KV
Waterproof: IP65
Impact Test: IK10
Corrosion Proof: WF2
Electrical: 220-240V, 50/60Hz
Operating Temperature: -25~45℃
TM21: L90B10>50,000H
Lifetime: 50,000H

AC220~240V | -25~+45 | IP65 | IK10 | 4KV Surge Protection | RG 0/1 | 50.000H | Dimmable | Emergency | +90% Efficient | INSTANT FULL LIGHT | 100% WARRANTY

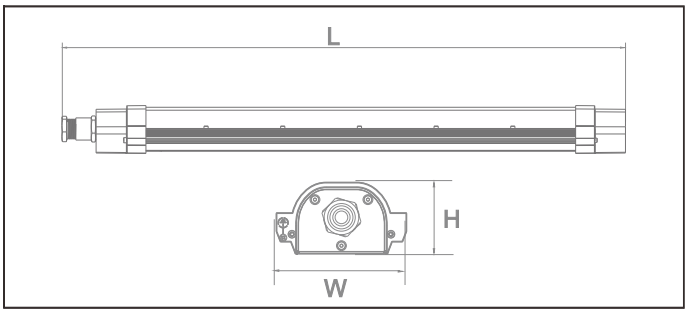

Functions

ZigBee · PWM · DALI · 0/1~10V

Optical options:

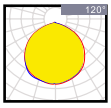

120lm/w | 5 YEARS WARRANTY | Explosion Proof Driver | Bridgelux LED

Model	Watt	Voltage	Lumen	CRI	IP	Dimension
ENEP-20W-03	20W	220~240V	2400LM	>80	IP65	L735*W115*H63MM
ENEP-40W-03A	40W	220~240V	4800LM	>80	IP65	L735*W115*H63MM
ENEP-40W-03B	40W	220~240V	4800LM	>80	IP65	L1335*W115*H63MM
ENEP-60W-03	60W	220~240V	7200LM	>80	IP65	L1335*W115*H63MM
ENEP-80W-03	80W	220~240V	9600LM	>80	IP65	L1335*W115*H63MM

ENELTEC brighten your ideas

Packing

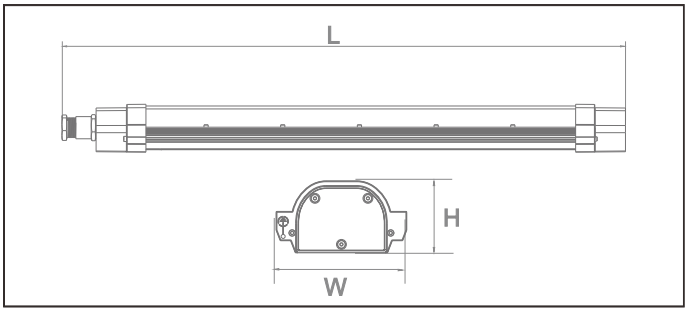

Model	L*W*H (mm)	Inner Carton(mm)			QTY / INNER CTN	Outer Carton(mm)			QTY / Outer CTN	NW/CTN	GW/CTN
ENEP-20W-03	735*115*63	/	/	/	/	900	160	115	1	2.60	3.30
ENEP-40W-03A	735*115*63	/	/	/	/	900	160	115	1	2.60	3.30
ENEP-40W-03B	1335*115*63	/	/	/	/	1500	160	115	1	4.00	4.70
ENEP-60W-03	1335*115*63	/	/	/	/	1500	160	115	1	4.00	4.70
ENEP-80W-03	1335*115*63	/	/	/	/	1500	160	115	1	4.10	4.80

Wire Connection

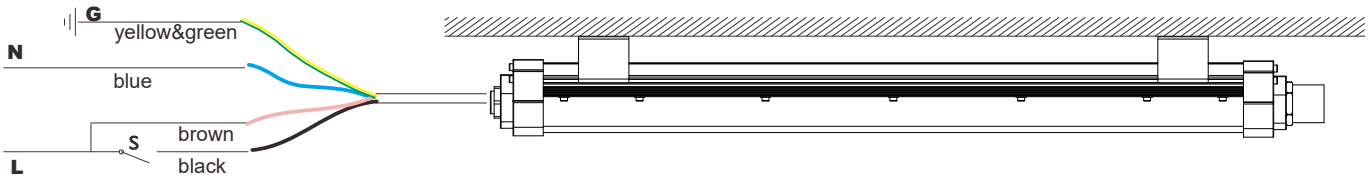

Blue--neutral wire N. Brown-Live wire L. Black--switch wire.
Yellow/Green--Ground wire.
Wall switch can be connected by Blue Wire and Black wire to control main lights
Blue and Brown wire are for emergency battery charging. Should connect to the power without any switch.

Installation

- Punch in the wall and install the suspension rope on the wall.
- Lock the rope on the triproof light hanging ring.
- Connect the blue wire and brown wire to the "N" and "L" respectively, yellow-green wire to the ground wire. Confirm correct connection, and switch power on.

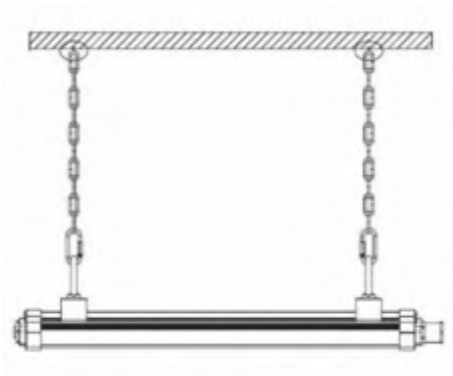

ENELTEC®
brighten your ideas